Product
- Exhale® shower head

Kohler Code
72597T-E-CP

Included Components
- Wall mounted shower arm
- Multi function showerhead

WELS RATING
(3 Star 9.0 Litres / min)

Features
- Polished chrome
- Metal construction
- Suitable for mains pressure
- KOHLER finishes resist tarnishing and corrosion
- Advanced spray engine provides four spray experiences:
  - Full coverage spray produces an encompassing spray for everyday use and utilises Katalyst air induction to create large, full drops.
  - Drenching rain delivers a soft, soothing circular water pattern.
  - Pulsating massage spray.
  - Silk spray releases a dense, luxurious spray ideal for rinsing.
- Full 360-degree rotation of entire sprayface cycles through spray functions.
- Silicone sprayface is easy to clean.

Related Products
- Exhale® slide shower

Technical Details

G½" is equal to BSP½"

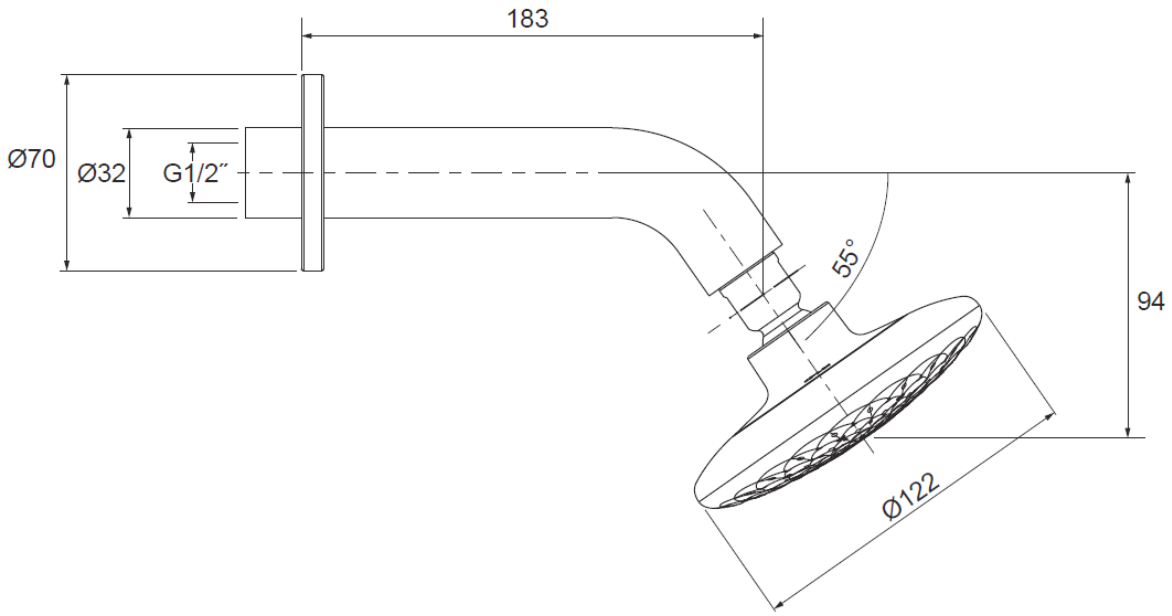

Installation Notes:
- G½" female thread.
- Optimum working pressure 300-500 kPa.
- Maximum working pressure 500kPa.
- Inline filters should be used to protect tapware from debris that may be present within the plumbing.